NOTICE:	ALL PARTS MUST MEET TO RoHS REQUIREMENTS	CUSTOMER OUTLINE DRAWING
RoHS ✓		

REV.	DESCRIPTION	ECN NO.	NAME	DATE
A0	FIRST EDITION	N/A	XU	2025/07/28

ORDER NO.	CABLE TYPE
805030-00-035-X	RG174
805030-00-036-X	RTK031

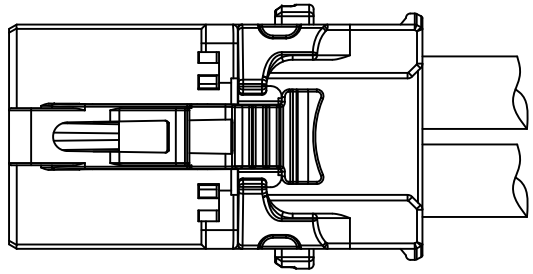

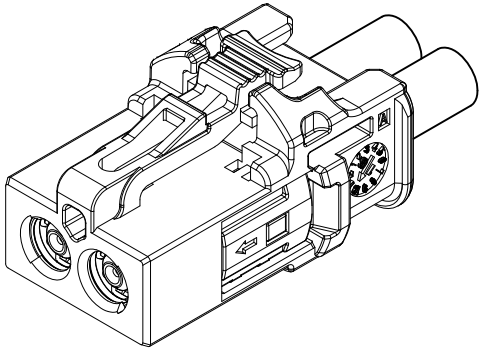

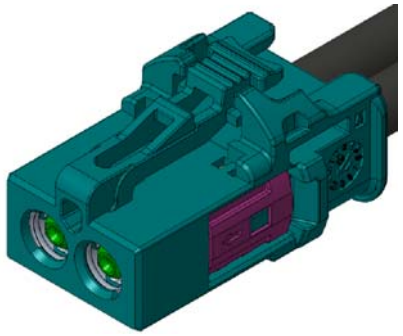

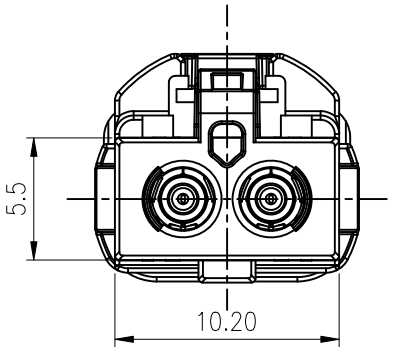

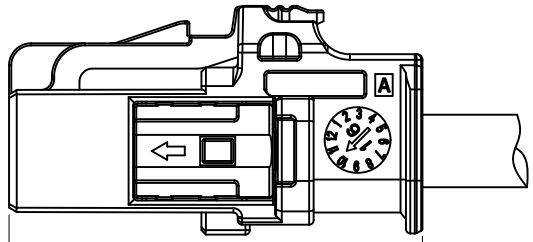

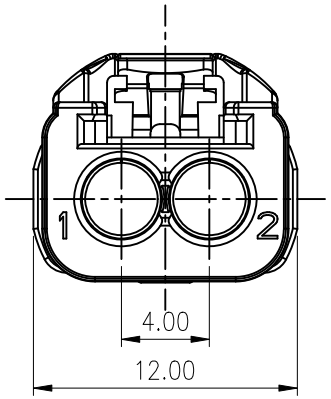

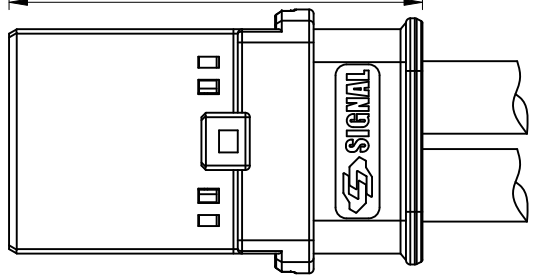

NOTES:
1. Material and plating: SEE TABLE
2. Electrical data:
   2.1. Impedance: 50 Ω
   2.2. Frequency: DC to 9 GHz
   2.3. Return loss: ⩾20 dB (DC to 3 GHz)
   ⩾14 dB (3 to 6 GHz)
   ⩾11 dB (6 to 9 GHz)
   2.4. Insertion loss: ⩽ 0.1 x f(GHz) dB
   2.5. Insulation resistance: 1000 MΩ MIN.
   2.6. Center contact resistance: 15 mΩ MAX
   2.7. Outer contact resistance: 5 mΩ MAX
   2.8. Test voltage: 750 V rms
   2.9. Working voltage: 60 V rms
   2.9. Power current: ⩽ 1 A DC
3. Mechanical data:
   3.1 Mating cycles: ⩾25
   3.2 Engagement force: ⩽15 N
   3.3 Retention force latch: ⩾ 110 N
   3.4 Coding efficiency: ⩾ 150 N
4. Environmental data
   4.1 Temperature range: −40°C TO +105°C

TABLE:

ITEM	PART NAME	MATERIAL	PLATING/COLOR	Q'TY
6	TPA	PBT	Purple-red	1
5	Crimping ferrule	COPPER ALLOY	TIN/NICKEL	1
4	Outer contact	COPPER ALLOY	TIN/NICKEL	1
3	Dielectric	PBT	Blue/Green	1
2	Center contact	COPPER ALLOY	GOLD/TIN	1
1	Housing	PBT-GF	SEE SHEET 2	1

SIGNAL® RF

APPROVED:	CUSTOMER P/N:
CHECKED:	REV. : A0
CHECKED:	SCALE: 3:1
DRAWING:	DATE: 2025-07-28

TITLE:
MINI FAKRA FEMALE(T-MF) FOR RG174、RTK031 CONNECTOR (Double)

DRAWING NO.

ORDER NO. 805030-00-035~036

THIRD ANGLE PROJECTION

TOLERANCES ARE:

DECIMALES	ANGLES
.x ±0.5	x.° ±5.0°
.xx ±0.3	.x° ±3.0°

UNITS: mm

SHEET: 1 OF 3

SIZE: A4