| NOTICE: | ALL PARTS MUST MEET TO RoHS REQUIREMENTS | CUSTOMER OUTLINE DRAWING |
|---|---|---|
| RoHS ✓ | | |

| REV. | DESCRIPTION | ECN NO. | NAME | DATE |
|---|---|---|---|---|
| A0 | FIRST EDITION | N/A | XU | 2025/07/28 |
| | | | | |

| ORDER NO. | CABLE TYPE |
|---|---|
| 805030-00-031-X | RG174 |
| 805030-00-032-X | RTK031 |

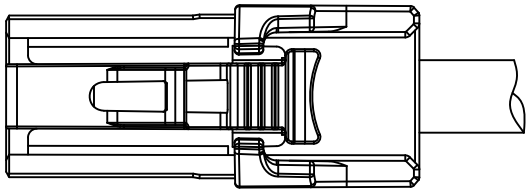

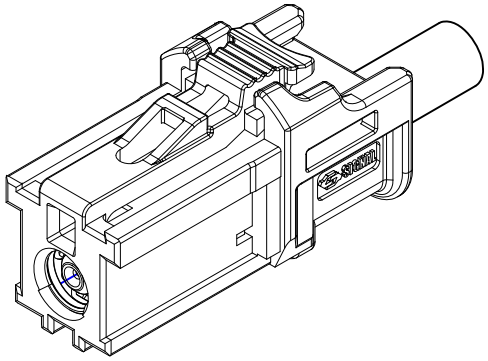

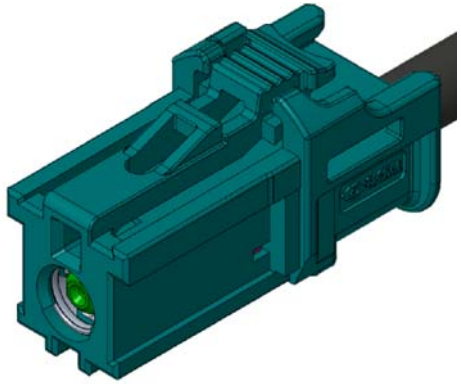

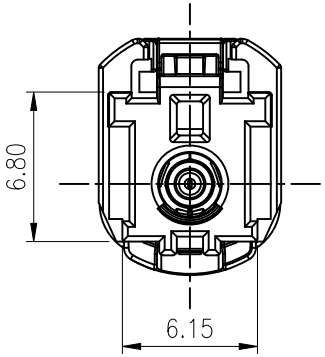


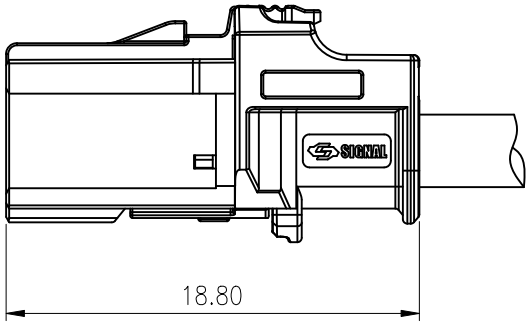


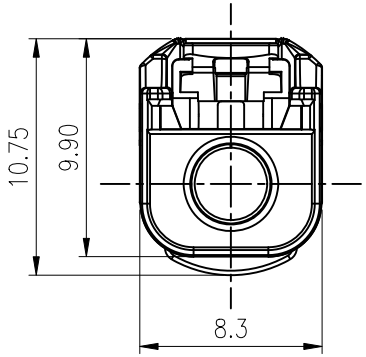


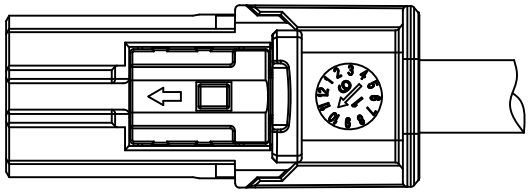

NOTES:
1. Material and plating: SEE TABLE
2. Electrical data:
   2.1. Impedance: 50 Ω
   2.2. Frequency: DC to 9 GHz
   2.3. Return loss: ⩾20 dB (DC to 3 GHz)
   ⩾14 dB (3 to 6 GHz)
   ⩾11 dB (6 to 9 GHz)
   2.4. Insertion loss: ⩽ 0.1 x f(GHz) dB
   2.5. Insulation resistance: 1000 MΩ MIN.
   2.6. Center contact resistance: 15 mΩ MAX
   2.7. Outer contact resistance: 5 mΩ MAX
   2.8. Test voltage: 750 V rms
   2.9. Working voltage: 60 V rms
   2.9. Power current: ⩽ 1 A DC
3. Mechanical data:
   3.1 Mating cycles: ⩾25
   3.2 Engagement force: ⩽15 N
   3.3 Retention force latch: ⩾ 110 N
   3.4 Coding efficiency: ⩾ 150 N
4. Environmental data
   4.1 Temperature range: −40°C TO +105°C

TABLE:

| ITEM | PART NAME | MATERIAL | PLATING/COLOR | Q'TY |
|---|---|---|---|---|
| 6 | TPA | PBT | Purple-red | 1 |
| 5 | Crimping ferrule | COPPER ALLOY | TIN/NICKEL | 1 |
| 4 | Outer contact | COPPER ALLOY | TIN/NICKEL | 1 |
| 3 | Dielectric | PBT | Blue/Green | 1 |
| 2 | Center contact | COPPER ALLOY | GOLD/TIN | 1 |
| 1 | Housing | PBT-GF | SEE SHEET 2 | 1 |

SIGNAL® RF

| | |
|---|---|
| APPROVED: | CUSTOMER P/N: |
| CHECKED: | REV. : A0 |
| CHECKED: | SCALE: 3:1 |
| DRAWING: | DATE: 2025-07-28 |

TITLE:
MINI FAKRA FEMALE(T-MF) FOR RG174、RTK031 CONNECTOR (Single)

DRAWING NO.

ORDER NO. 805030-00-031~032

THIRD ANGLE PROJECTION

TOLERANCES ARE:

| DECIMALES | ANGLES |
|---|---|
| .x ±0.5 | x.° ±5.0° |
| .xx ±0.3 | .x° ±3.0° |

UNITS: mm

SHEET: 1 OF 3

SIZE: A4