REV	DESCRIPTION	DATE	APPROVED
A0	CREATED DRAWING	2023/08/15	ZCH

说明：

1. 电气特性
   额定电压：150V AC/DC，
   绝缘电阻：>100M ohms
   额定电流：8A
   连接器的接触电阻≤5m ohms
2. 机械特性：插拔/周期>100 次，
3. 环境特性
   防护特级：IP67
   操作温度：-40°C～115°C
4. 单PCS包装
   客户料号，产品名称、数量、日期
5. 所有材料都符合RoHS标准

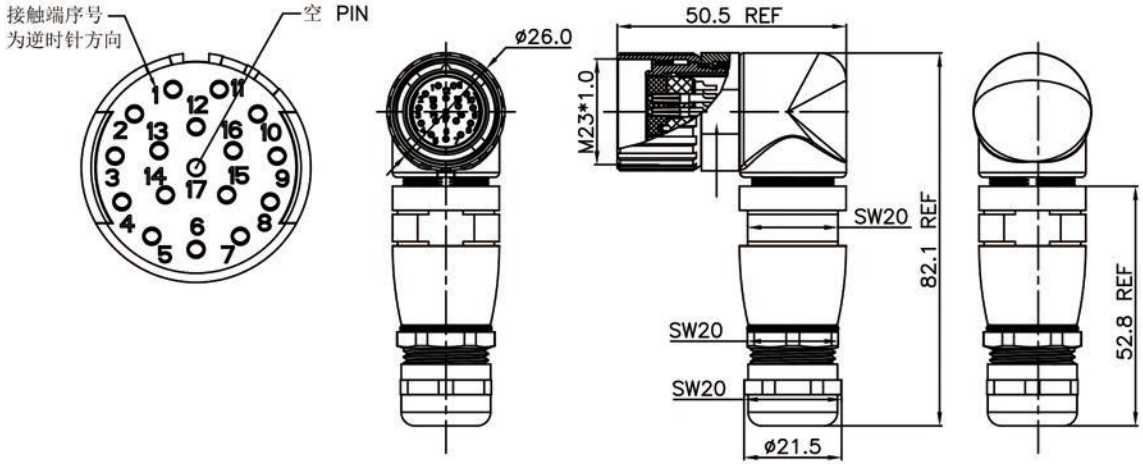

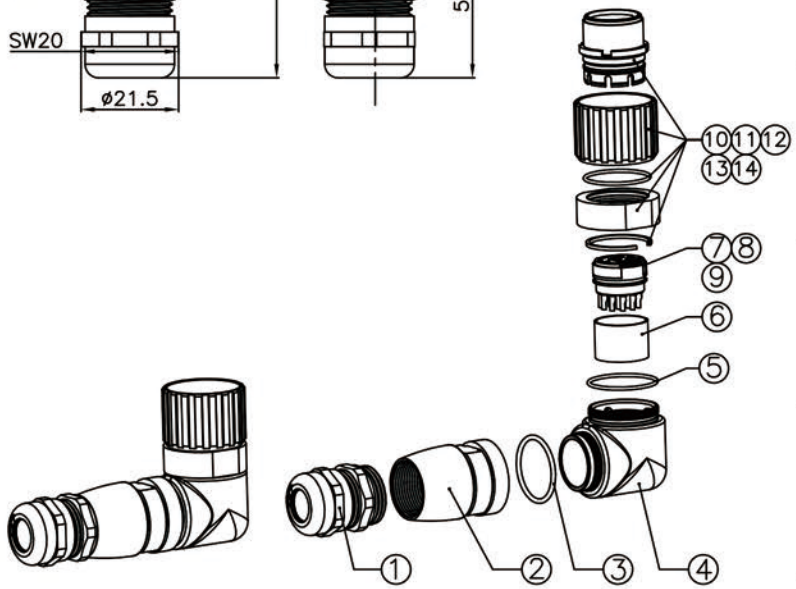

SIGNAL®
Shenzhen Signal Electronics co.,Ltd

DRAWING BY	DATE
CHECKED BY	DATE
CHECKED BY	DATE
APPROVED BY	DATE

THE INFORMATION CONTAINED IN THIS DRAWING IS THE SOLE PROPERTY OF SIGNAL COMPANY.
ANY REPRODUCTION IN PART OR WHOLE WITHOUT THE WRITTEN PERMISSION OF SIGNAL COMPANY ISPROHIBITED.

TITLE: M23 16PIN FEMALE HEAD METAL ASSEMBLY (M23*1.0, ELBOW)

SGN NO: 230016-02-002 REV.
DWG NO
CUSTOMER A0

TOLERANCES ARE:

DECIMALES	ANGLES
.x ±0.5	x.° ±2.0°
.xx ±0.20	.x° ±1.0°

THIRD ANGLE PROJECTION

SIZE: A4 UNITS: mm
SCALE: 1:1 SHEET: 1 OF 1

Web: http://www.signal-connector.com
E-mail:saudi@sz-signal.com